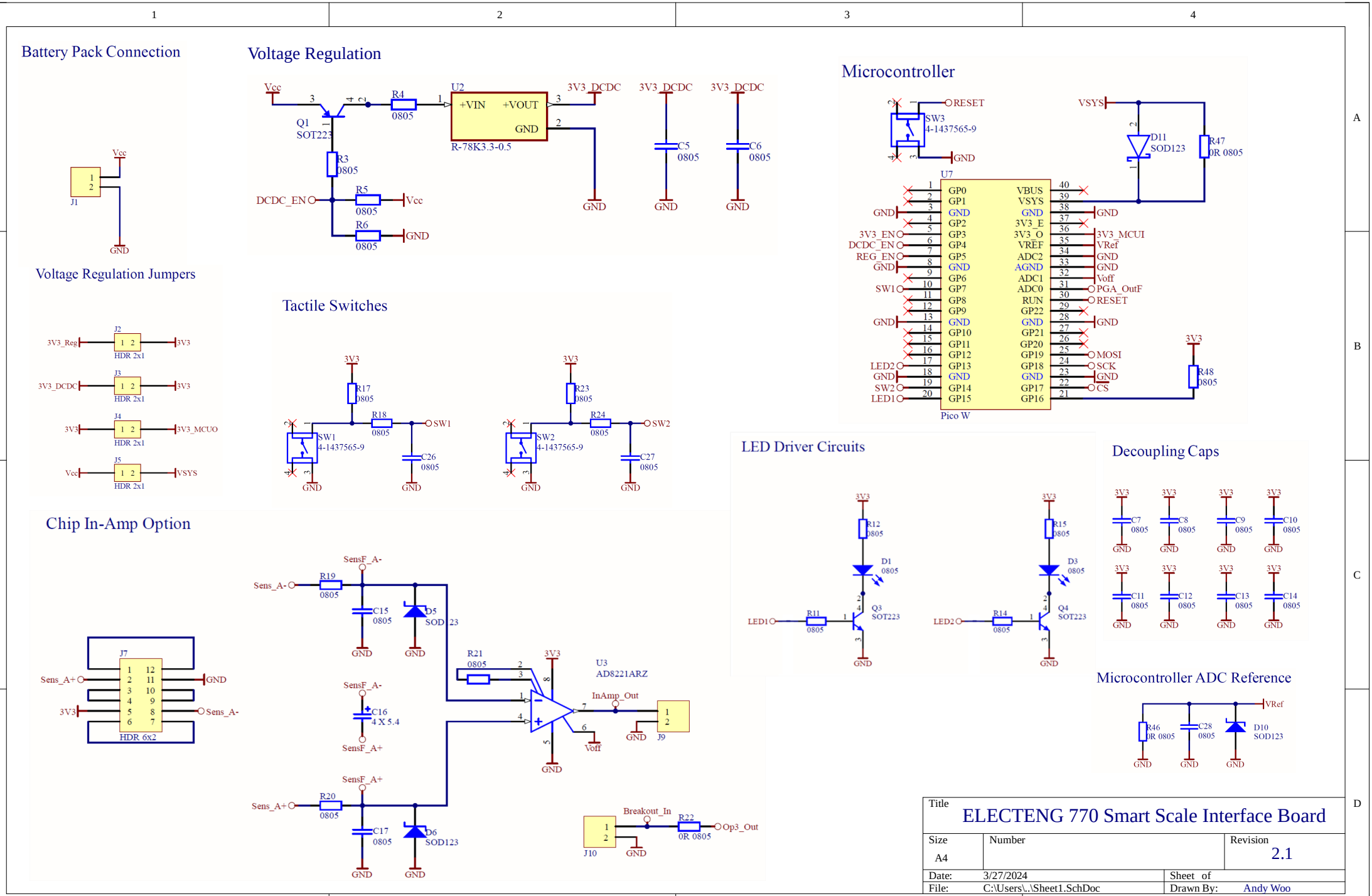
Battery Pack Connection
Vcc
J1
GND
Voltage Regulation
Vcc
Q1
SOT223
R4
0805
U2
+VIN
+VOUT
GND
R-78K3.3-0.5
3V3_DCDC
C5
0805
C6
0805
R3
0805
DCDC_EN
R5
0805
R6
0805
Microcontroller
RESET
SW3
4-1437565-9
VSYS
D11
SOD123
R47
0R 0805
U7
GP0
GP1
GP2
GP3
GP4
GP5
GP6
GP7
GP8
GP9
GP10
GP11
GP12
GP13
GP14
GP15
VBUS
VSYS
3V3_E
3V3_O
VREF
ADC2
AGND
ADC1
ADC0
RUN
GP22
GP21
GP20
GP19
GP18
GP17
GP16
3V3_EN
REG_EN
SW1
SW2
LED2
LED1
3V3_MCUI
VRef
Voff
PGA_OutF
MOSI
SCK
CS
R48
0805
Pico W
Voltage Regulation Jumpers
J2
3V3_Reg
3V3
HDR 2x1
J3
3V3_DCDC
J4
3V3_MCUO
J5
VSYS
Tactile Switches
R17
0805
R18
0805
SW1
4-1437565-9
C26
0805
R23
0805
R24
0805
SW2
4-1437565-9
C27
0805
LED Driver Circuits
R12
0805
D1
0805
Q3
SOT223
R11
0805
R15
0805
D3
0805
Q4
SOT223
R14
0805
Decoupling Caps
C7
0805
C8
0805
C9
0805
C10
0805
C11
0805
C12
0805
C13
0805
C14
0805
Chip In-Amp Option
J7
Sens_A+
Sens_A-
HDR 6x2
SensF_A-
R19
0805
C15
0805
D5
SOD 23
R21
0805
U3
AD8221ARZ
InAmp_Out
J9
C16
4 X 5.4
SensF_A+
R20
0805
C17
0805
D6
SOD123
Breakout_In
R22
0R 0805
Op3_Out
J10
Microcontroller ADC Reference
R46
0R 0805
C28
0805
D10
SOD123
Title
ELECTENG 770 Smart Scale Interface Board
Size
A4
Number
Revision
2.1
Date:
3/27/2024
Sheet of
File:
C:\Users\..\Sheet1.SchDoc
Drawn By:
Andy Woo

Board Stack Report